Dawlance

ڈاؤلینس ریلائبل ہے!

Dawlance

MICROWAVE OVEN

This owner's guide book is for the following 900 watts Microwave Oven Model:

DW-550AF

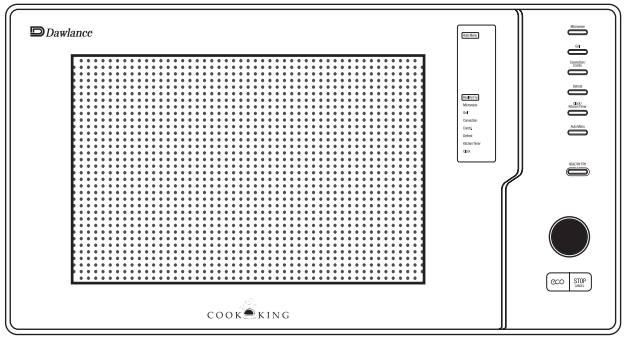

1. Read these instructions carefully before installing and operating the oven. Keep them for further reference.
2. Record in the space below the SERIAL NO. found on the nameplate on your oven and retain this information for future reference.

SERIAL NO.:

ڈاؤلینس ریلائبل ہے!

PRECAUTIONS TO AVOID POSSIBLE EXPOSURE TO EXCESSIVE MICROWAVE ENERGY

(a) Do not attempt to operate this oven with the door open since this can result in harmful exposure to microwave energy. It is important not to break or tamper with the safety interlocks.

(b) Do not place any object between the oven front face and the door or allow soil or cleaner residue to accumulate on sealing surfaces.

(c) WARNING: If the door or door seals are damaged, the oven must not be operated until it has been repaired by a competent person.

ADDENDUM

If the apparatus is not maintained in a good state of cleanliness, its surface could be degraded and affect the lifespan of the apparatus and lead to a dangerous situation.

Specifications

Model:	DW-550AF
Rated Voltage:	230V~50Hz
Rated Input Power (Microwave):	1450W
Rated Output Power (Microwave):	900W
Rated Input Power (Grill):	1100W
Rated Input Power (Convection):	2500W
Oven Capacity	30L
Turntable Diameter:	∅ 315mm
External Dimensions:	520x501x326mm
Net Weight:	Approx. 18kg

IMPORTANT SAFETY INSTRUCTIONS WARNING

1. Read and follow the specific:"PRECAUTIONS TO AVOID POSSIBLE EXPOSURE TO EXCESSIVE MICROWAVE ENERGY".
2. This appliance can be used by children aged from 8 years and above and persons with reduced physical, sensory or mental capabilities or lack of experience and knowledge if they have been given supervision or instruction concerning use of the appliance in a safe way and understand the hazards involved. Children shall not play with the appliance. Cleaning and user maintenance shall not be made by children unless they are older than 8 and supervised. Children less than 8 years of age shall be kept away unless continuously supervised.
3. Keep the appliance and its cord out of reach of children less than 8 years.
4. If the supply cord is damaged, it must be replaced by the manufacturer, its service agent or similarly qualified persons in order to avoid a hazard.(For appliance with type Y attachment)
5. WARNING: Ensure that the appliance is switched off before replacing the lamp to avoid the possibility of electric shock.

6. WARNING: It is hazardous for anyone other than a competent person to carry out any service or repair operation that involves the removal of a cover which gives protection against exposure to microwave energy.
7. WARNING: Liquids and other foods must not be heated in sealed containers since they are liable to explode.
8. When heating food in plastic or paper containers, keep an eye on the oven due to the possibility of ignition.
9. Only use utensils that are suitable for use in microwave ovens.
10. If smoke is emitted, switch off or unplug the appliance and keep the door closed in order to stifle any flames.
11. Microwave heating of beverages can result in delayed eruptive boiling, therefore care must be taken when handling the container.
12.The contents of feeding bottles and baby food jars shall be stirred or shaken and the temperature checked before consumption, in order to avoid burns.
13. Eggs in their shell and whole hard-boiled eggs should not be heated in microwave ovens since they may explode, even after microwave heating has ended.
14. The oven should be cleaned regularly and any food deposits removed.
15. Failure to maintain the oven in a clean condition could lead to deterioration of the surface that could adversely affect the life of the appliance and possibly result in a hazardous situation.

16. The appliance must not be installed behind a decorative door in order to avoid overheating. (This is not applicable for appliances with decorative door.)
17.Only use the temperature probe recommended for this oven.(for ovens provided with a facility to use a temperature-sensing probe.)
18.The microwave oven shall not be placed in a cabinet unless it has been tested in a cabinet.
19.The microwave oven must be operated with the decorative door open. (for ovens with a decorative door.)
20.This appliance is intended to be used in household and similar applications such as:
-staff kitchen areas in shops, offices and other working environments;
-by clients in hotels, motels and other residential type environments;
-farm houses;
-bed and breakfast type environments.
21.The microwave oven is intended for heating food and beverages. Drying of food or clothing and heating of warming pads, slippers, sponges, damp cloth and similar may lead to risk of injury, ignition or fire.
22. Metallic containers for food and beverages are not allowed during microwave cooking.
23. The appliance shall not be cleaned with a steam cleaner.
24.The appliance is intended to be used freestanding.
25.The rear surface of appliances shall be placed against a wall.

31. WARNING: The appliance and its accessible parts become hot during use. Care should be taken to avoid touching heating elements. Children less than 8 years of age shall be kept away unless continuously supervised.
32. The microwave oven must be operated with the decorative door open. (for ovens with a decorative door.)
33. The rear surface of appliance shall be placed against a wall.
34. The microwave oven must not be placed in a cabinet.
35. The microwave oven is intended for heating food and beverages. Drying of food or clothing and heating of warming pads, slippers, sponges, damp cloth and similar may lead to risk of injury, ignition or fire.

READ CAREFULLY AND KEEP FOR FUTURE REFERENCE

To Reduce the Risk of Injury to Persons Grounding Installation

DANGER

Electric Shock Hazard Touching some of the internal components can cause serious personal injury or death. Do not disassemble this appliance.

WARNING

Electric Shock Hazard Improper use of the grounding can result in electric shock. Do not plug into an outlet until appliance is properly installed and grounded.

This appliance must be grounded. In the event of an electrical short circuit, grounding reduces the risk of electric shock by providing an escape wire for the electric current. This appliance is equipped with a cord having a grounding wire with a grounding plug. The plug must be plugged into an outlet that is properly installed and grounded.

Consult a qualified electrician or serviceman if the grounding instructions are not completely understood or if doubt exists as to whether the appliance is properly grounded. If it is necessary to use an extension cord, use only a 3-wire extension cord.

1. A short power-supply cord is provided to reduce the risks resulting from becoming entangled in or tripping over a longer cord.
2. If a long cord set or extension cord is used:
1) The marked electrical rating of the cord set or extension cord should be at least as great as the electrical rating of the appliance.
2) The extension cord must be a grounding-type 3-wire cord.
3) The long cord should be arranged so that it will not drape over the counter top or tabletop where it can be pulled on by children or tripped over unintentionally.

CLEANING

Be sure to unplug the appliance from the power supply.

1. Clean the cavity of the oven after using with a slightly damp cloth.
2. Clean the accessories in the usual way in soapy water.
3. The door frame and seal and neighbouring parts must be cleaned carefully with a damp cloth when they are dirty.
4. Do not use harsh abrasive cleaners or sharp metal scrapers to clean the oven door glass since they can scratch the surface, which may result in shattering of the glass.
5. Cleaning Tip---For easier cleaning of the cavity walls that the food cooked can touch: Place half a lemon in a bowl, add 300ml (1/2 pint) water and heat on 100% microwave power for 10 minutes. Wipe the oven clean using a soft, dry cloth.

UTENSILS

CAUTION

Personal Injury Hazard

It is hazardous for anyone other than a compentent person to carry out any service or repair operation that involves the removal of a cover which gives protection against exposure to microwave energy.

See the instructions on "Materials you can use in microwave oven or to be avoided in microwave oven."

There may be certain non-metallic utensils that are not safe to use for microwaving. If in doubt, you can test the utensil in question following the procedure below:

Utensil Test:

1. Fill a microwave-safe container with 1 cup of cold water (250ml) along with the utensil in question.
2. Cook on maximum power for 1 minute.
3. Carefully feel the utensil. If the empty utensil is warm, do not use it for microwave cooking.
4. Do not exceed 1 minute cooking time.

Materials you can use in microwave oven

Utensils	Remarks
Aluminum foil	Shielding only. Small smooth pieces can be used to cover thin parts of meat or poultry to prevent overcooking. Arcing can occur if foil is too close to oven walls. The foil should be at least 1 inch (2.5cm) away from oven walls.
Browning dish	Follow manufacturer’s instructions. The bottom of browning dish must be at least 3/16 inch (5mm) above the turntable. Incorrect usage may cause the turntable to break.
Dinnerware	Microwave-safe only. Follow manufacturer's instructions. Do not use cracked or chipped dishes.
Glass jars	Always remove lid. Use only to heat food until just warm. Most glass jars are not heat resistant and may break.
Glassware	Heat-resistant oven glassware only. Make sure there is no metallic trim. Do not use cracked or chipped dishes.
Oven cooking bags	Follow manufacturer’s instructions. Do not close with metal tie. Make slits to allow steam to escape.
Paper plates and cups	Use for short–term cooking/warming only. Do not leave oven unattended while cooking.
Paper towels	Use to cover food for reheating and absorbing fat. Use with supervision for a short-term cooking only.
Parchment paper	Use as a cover to prevent splattering or a wrap for steaming.
Plastic	Microwave-safe only. Follow the manufacturer’s instructions. Should be labeled "Microwave Safe". Some plastic containers soften, as the food inside gets hot. "Boiling bags" and tightly closed plastic bags should be slit, pierced or vented as directed by package.
Plastic wrap	Microwave-safe only. Use to cover food during cooking to retain moisture. Do not allow plastic wrap to touch food.
Thermometers	Microwave-safe only (meat and candy thermometers).
Wax paper	Use as a cover to prevent splattering and retain moisture.

Materials to be avoided in microwave oven

Utensils	Remarks
Aluminum tray	May cause arcing. Transfer food into microwave-safe dish.
Food carton with metal handle	May cause arcing. Transfer food into microwave-safe dish.
Metal or metal-trimmed utensils	Metal shields the food from microwave energy. Metal trim may cause arcing.
Metal twist-ties	May cause arcing and could cause a fire in the oven.
Paper bags	May cause a fire in the oven.
Plastic foam	Plastic foam may melt or contaminate the liquid inside when exposed to high temperature.
Wood	Wood will dry out when used in the microwave oven and may split or crack.

SETTING UP YOUR OVEN

Names of Oven Parts and Accessories

Remove the oven and all materials from the carton and oven cavity.
Your oven comes with the following accessories:

Glass tray	1
Turntable ring assembly	1
Instruction Manual	1

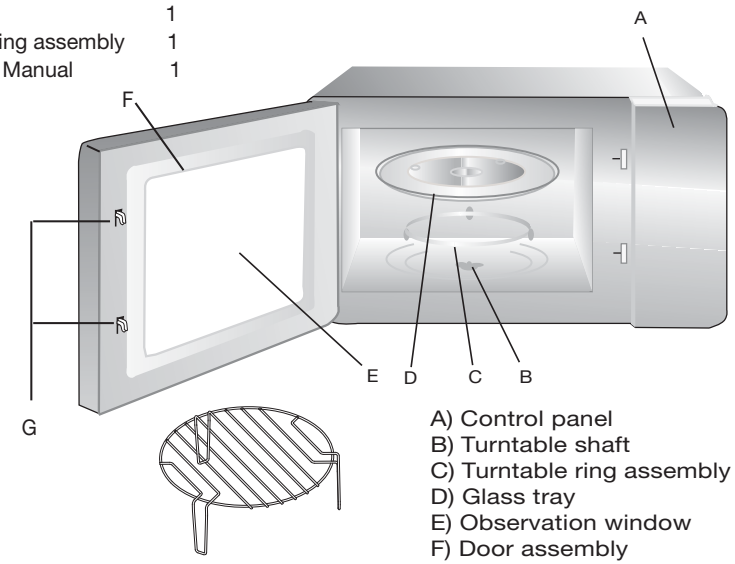

Grill Rack(Can not be used in microwave function and must be placed on the glass tray)

A) Control panel
B) Turntable shaft
C) Turntable ring assembly
D) Glass tray
E) Observation window
F) Door assembly
G) Safety interlock system

Turntable Installation

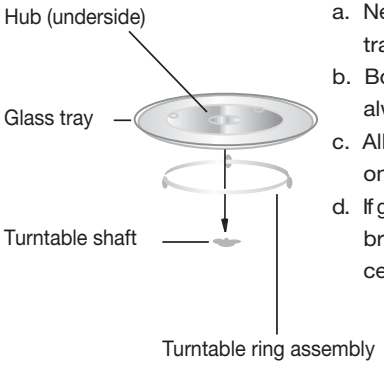

a. Never place the glass tray upside down. The glass tray should never be restricted.
b. Both glass tray and turntable ring assembly must always be used during cooking.
c. All food and containers of food are always placed on the glass tray for cooking.
d. If glass tray or turntable ring assembly cracks or breaks, contact your nearest authorized service center.

Countertop Installation

Remove all packing material and accessories. Examine the oven for any damage such as dents or broken door. Do not install if oven is damaged.

Cabinet: Remove any protective film found on the microwave oven cabinet surface. Do not remove the light brown Mica cover that is attached to the oven cavity to protect the magnetron.

Installation

1. Select a level surface that provide enough open space for the intake and/or outlet vents.

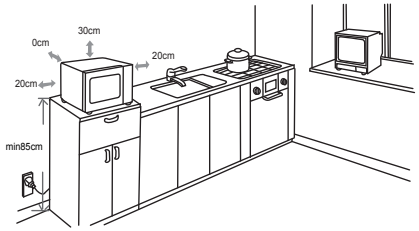

1) The minimum installation height is 85cm.
2) The rear surface of appliance shall be placed against a wall. Leave a minimum clearance of 30cm above the oven, a minimum clearance of 20cm is required between the oven and any adjacent walls.
3) Do not remove the legs from the bottom of the oven.
4) Blocking the intake and/or outlet openings can damage the oven.
5) Place the oven as far away from radios and TV as possible. Operation of microwave oven may cause interference to your radio or TV reception.

2. Plug your oven into a standard household outlet.
Be sure the voltage and the frequency is the same as the voltage and the frequency on the rating label.

WARNING: Do not install oven over a range cooktop or other heat-producing appliance. If installed near or over a heat source, the oven could be damaged and the warranty would be void.

The accessible surface may be hot during operation.

OPERATION INSTRUCTION

This microwave oven uses modern electronic control to adjust cooking parameters to meet your needs better for cooking.

1.Clock Setting

1) Press "CLOCK/KITCHEN TIMER" once. "00 00" displays, and the hour figures will flash.

2) Turn " " to adjust the hour figures, the input time should be within 0--23(24-hour).

3) Press "CLOCK/KITCHEN TIMER", the minute figures will flash.

4) Turn " " to adjust the minute figures, the input time should be within 0--59.

5) Press "CLOCK/KITCHEN TIMER " to finish clock setting.

2. Kitchen Timer

1) Press "CLOCK/KITCHEN TIMER" twice, the screen will display 00 00.

2) Turn " " to enter the correct timer.(The maximum cooking time is 95 minutes.)

3) Press "CONFIRM/+30S/START " to confirm setting.

Note: The kitchen Time is differ from 24-hour system,Kitchen Timer is a timer.

3.Microwave Cooking

1) In standby state, press the "MICROWAVE" once, the screen will display "P10"

2) Turn " " to select the microwabe power.
Note: The microwave power can be chosen from P10 to P1.

3) Press the "CONFIRM/+30S/START " to confirm the power.

4) Turn " " to adjust the cooking time. (The maximum cooking time is 95 minutes.)

5) Press the " CONFIRM/+30S/START" key to start cooking.

Level	10	8	5	3	1
Power	100%	80%	50%	30%	10%
Display	P10	P8	P5	P3	P1

4.Grill Cooking

1) In standby state, press the "GRILL" button once, the screen will display "G".

2) Turn " " to adjust the cooking time. (The maximum cooking time is 95 minutes.)

3) Press the " CONFIRM/+30S/START " key to start cooking.

Note: If half the grill time pass es, the oven sounds twice to tell you to turn the food over. You can just leave continue working. But in order to have a better effect of grilling food, you should turn the food over, close the door, and then press "CONFIRM/+30S/START" continue cooking. If no operation, the oven will work automatically.

5. Convection Cooking (With preheating function)

The convection cooking can let you to cook the food as a traditional oven. Microwave is not used. It is recommended that you should preheat the oven to the appropriate temperature before placing the food in the oven.

1) In standby state, press the "CONVECTION/COMBI."once, the screen will display "140°C"

2) Turn " " to select the convection temperature.
Note: The temperature can be chosen from 140°C to 230°C .

3) Press the " CONFIRM/+30S/START " to confirm the temperature.

4) Press the " CONFIRM/+30S/START " to start preheating. When the preheating temperature arrives, the buzzer will sound to remind you to put the food into the oven. And the preheated temperature is displayed and flashes.

5) Put the food into the oven and close the door.
Turn " " to adjust the cooking time.

6) Press the " CONFIRM/+30S/START " key to start cooking.

Note: a. Cooking time cannot be input until the preheating temperature arrives.
If the temperature arrives, door must be opened to input the cooking time.
b. If the time not input in 5 minutes, the oven will stop preheating. The buzzer sounds 5 times and turn back to standby state.

6.Convection Cooking (Without pre-heating function)

1) In standby state, press the "CONVECTION/COMBI."once, the screen will display "140°C"

2) Turn " " to select the convection temperature.
Note: The temperature can be chosen from 140°C to 230°C .

3) Press the " CONFIRM/+30S/START " to confirm the temperature.

4)Turn " " to adjust the cooking time.

5) Press the " CONFIRM/+30S/START " key to start cooking.

7.Combi. Cooking

1) In standby state, press the "CONVECTION/COMBI." twice, the screen will display "C-1"

2) Turn " " to select the combi. cooking mode from C-1 to C-4.

3) Press the " CONFIRM/+30S/START " to confirm the selection.

4) Turn " " to adjust the cooking time. (The maximum cooking time is 95 minutes.)

5) Press the " CONFIRM/+30S/START " key to start cooking.

Note: Combination instructions

Instructions	Display	Microwave	Grill	Convection
1	C-1	●		●
2	C-2	●	●	
3	C-3		●	●
4	C-4	●	●	●

8. Defrost by W.T.

1) Press " DEFROST " pad once,the oven will display "d 1",.

2) Turn " to select the weight of food.At the same time.
The weight should be 100g-2kg.

3) Press " CONFIRM/+30S/START " key to start defrosting.

9. Defrost by Time

1) Press " DEFROST " key twice, the oven will display "d 2"

2) Turn " " to select the cooking time.The maximum setting time is 95 minutes.

3) Press " CONFIRM/+30S/START " key to start defrosting.

10. Auto Menu

1) In waiting state, press " AUTO MENU" once, the screen will display "A1"

2) Turn " " to choose the menu you want, and "A1","A2","A3"…."A10" will be displayed.

3) Press " CONFIRM/+30S/START " to confirm the menu you need.

4) Turn " to choose the weight of menu,and "g" indicator will light.

5) Press " CONFIRM/+30S/START " to start cooking.

Note: When you choose A 8 cake, please do not put the cake into the oven at the begining. The oven needs to be preheated to 160 degree first. After sevarel minutes, the buzzer sounds twice to remind you to put the cake into the oven. After putting the cake in the oven, please press" CONFIRM/+30S/START "again. The timer will count down, and the cake will be cooked perfectly.

If half the 2/3 grill time pass in roast chicken, the oven sounds twice to tell you to turn the food over .

Auto menu Chart

Menu	Weight	Display	Power
A1 AUTO REHEAT	150g	150	100%
	250g	250	
	350g	350	
	450g	450	
	600g	600	
A2 SWEET & SOUR POTATO	1 (about 230g)	1	100%
	2 (about 460g)	2	
	3 (about 690g)	3	
A3 BEEF PASANDAY	150g	150	100%
	300g	300	
	450g	450	
	600g	600	
A4 VEGETABLE MASALA	150g	150	100%
	350g	350	
	500g	500	
A5 FISH CURRY	150g	150	80%
	250g	250	
	350g	350	
	450g	450	
	650g	650	
A6 MACRONI PASTA	50g(with 450g cold water)	50	80%
	100g(with 800g coldwater)	100	
	150g(with 1200g cold water)	150	
A7 CHICKEN CORN SOUP	200ml	200	100%
	400ml	400	
	600ml	600	
A8 SPONGE CAKE	475g	475	Preheat to 160˚C
A9 CHICKEN TIKKA PIZZA	200g	200	C-4
	300g	300	
	400g	400	
A10 MUGHLAI CHICKEN	500g	500	C-4
	750g	750	
	1000g	1000	
	1200g	1200	

11. Healthy Fry

1) In waiting state, press " HEALTHY FRY" once, the screen will display "H1"

2) Turn " to choose the menu you want, and "H1","H2","H3"...."H9" will be displayed.

3) Press "CONFIRM/+30S/START" to start cooking.

Note: When you choose Healthy Fry function , please do not put the food into the oven at the begining. The oven needs to be preheated first. After sevarel minutes, the buzzer sounds twice to remind you to put the food into the oven. After putting the food in the oven, please press" CONFIRM/+30S/START " again. The timer will count down, and the will be cookedfood perfectly.

Healthy Fry menu Chart

NO	Menu	Temp.(˚C)	Weight(g)
H1	Frozen French fries	210	50-150
H2	Frozen Potato cutlets	230	100-300
H3	Frozen Finger Fish	230	100-300
H4	Frozen Onion rings	230	100-200
H5	Frozen Chicken nuggets	230	100-300
H6	Chapli Kabab	200	100-300
H7	Frozen Prawns	200	100-300
H8	Sweet Corns	230	100-300
H9	Spring rolls	200	100-300

12. Quick start

1) In standby state, press " CONFIRM/+30S/START " to start cooking with 100% power for 30 seconds, each added press will increase 30 seconds cooking time up to 94 minutes and 59 seconds. Then press "CONFIRM/+30S/START" to start cooking

2) In microwave, grill, combination, combi. cooking and time defrost state , each press of " CONFIRM/+30S/START " can increase 30 seconds of cooking time.

3) In waiting state, turn " " left to choose cooking time directly then press "CONFIRM/+30S/START" key to cook with 100% microwave power.

Note: this function cannot work under weight defrost or auto menu cooking.

13. ECO Function

In standby state, press" ECO "once , the screen goes off. Press any button to light the screen again.

14. Lock-out Function for Children

Lock: In standby state, press " STOP/CANCEL" for 3 seconds, there will be a long "beep" denoting entering into the children-lock state and the lock indicator will light. The screen will enter to initial state.

Lock quitting: In locked state, press " STOP/CANCEL" for 3 seconds, there will be a long "beep" denoting that the lock is released, and the lock indicator will disapear.

15. Special Specifications

Once the cooking programmer has been set , " CONFIRM/+30S/START " is not pressed in 5 minutes. The screen will enter to standby state.

Trouble shooting

Normal	
Microwave oven interfering TV reception	Radio and TV reception may be interfered when microwave oven operating. It is similar to the interference of small electrical appliances, like mixer, vacuum cleaner, and electric fan. It is normal.
Dim oven light	In low power microwave cooking, oven light may become dim. It is normal.
Steam accumulating on door, hot air out of vents	In cooking, steam may come out of food. Most will get out from vents. But some may accumulate on cool place like oven door. It is normal.
Oven started accidentally with no food in.	It is forbidden to run the unit without any food inside. It is very dangerous.

Trouble	Possible Cause	Remedy
Oven can not be started.	(1) Power cord not plugged in tightly.	Unplug. Then plug again after 10 seconds.
	(2) Fuse blowing or circuit breaker works.	Replace fuse or reset circuit breaker (repaired by professional personnel of our company)
	(3) Trouble with outlet.	Test outlet with other electrical appliances.
Oven does not heat.	(4) Door not closed well.	Close door well.

According to Waste of Electrical and Electronic Equipment (WEEE) directive, WEEE should be separately collected and treated. If at any time in future you need to dispose of this product please do NOT dispose of this product with household waste. Please send this product to WEEE collecting points where available.

PN:16170000A57456

Dawlance

The widest service center network in the country with more than 200 outlets

Dawlance Reliable service is available for all household products

Services at your doorstep within 24 hours

Call Center Services available all week from 8:30am to 8:30pm

Service UAN # 021-111-11-7359 (RELY)

Head Office: Dawlance Center 7/4, Civil Lines-9
Dr. Ziauddin Ahmed Road, Karachi.
Ph: (021) 35652450-9
E-mail: customer.service@dawlance.com.pk
Website: www.dawlance.com.pk

ڈاؤلینس ریلائبل ہے!